TLYSBRC

Vanity



Properties

Light Source	E26 Lamp Base
Lamp QTY	3
Location	Damp
Base Construction	Steel
Lens	Glass
Standard Finish	Black

Specs

Voltage	120V
Dimensions	W:22" H:8.5" E:7"
Glass Color	Clear
Glass Shape	Round
Dimming	Triac**

** With use of dimmable bulbs

Light Properties

Recommended Bulb	A19*

*Not included

Not seeing what you're looking for? Contact us! info@asllighting.com

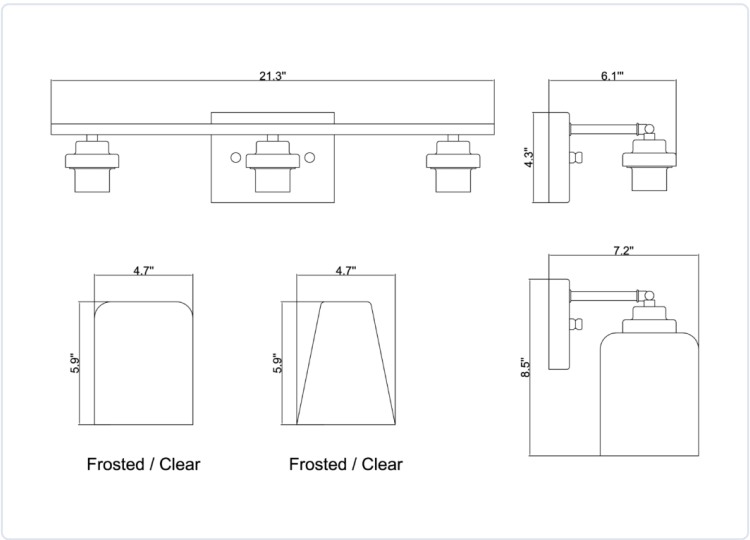

© Copyright © 2026 ASL Lighting Inc. All rights reserved. • asllighting.com