BCRMB11

Sconce



ADA Compliant

DAMP LOCATION | 120/277V | 0-10V DIMMABLE | Triac Dim | CRI 80+

IN STOCK | 5 YEAR WARRANTY | CCT SELECTABLE

Properties

Light Source	Integrated LED
Location	Damp
Base Construction	Steel
Lens	Acrylic
Standard Finish	Satin Nickel

Specs

Wattage	9
Voltage	120-277
Dimensions	W:4.3" H:11.1" E:3.7"
Dimming	Triac / 0-10V
CCT	3CCT - 3000K / 3500K / 4000K

Light Properties

Lumens	700
CRI	80
Life Hours	50,000

Not seeing what you're looking for? Contact us! info@asllighting.com

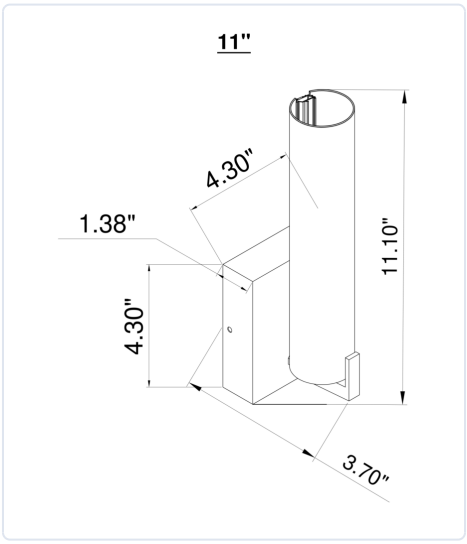

© Copyright © 2026 ASL Lighting Inc. All rights reserved. • asllighting.com